Functional Devices, Inc. • p: 800.888.5538 • f: 765.883.7505 • www.functionaldevices.com • sales@functionaldevices.com

RIBTW2401B-LN

LonWorks® Twisted-Pair FT-10 Network Enclosed Dual I/O Device: One Binary Output (20 Amp Relay SPDT), One Binary Input (Dry Contact Class 2); 24 Vac/dc or 120 Vac Power Input

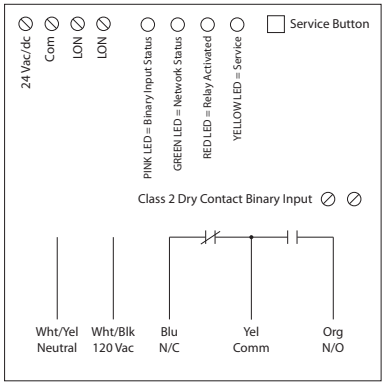

RIBTW2402B-LN

LonWorks® Twisted-Pair FT-10 Network Enclosed Dual I/O Device: One Binary Output (20 Amp Relay SPDT), One Binary Input (Dry Contact Class 2); 24 Vac/dc or 208-277 Vac Power Input

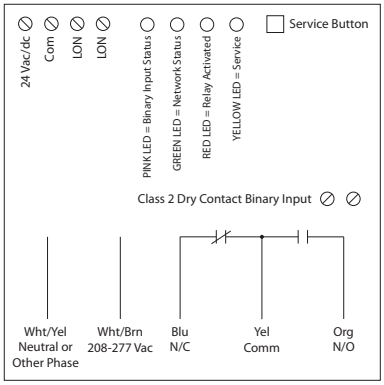

Network Compatible Relays

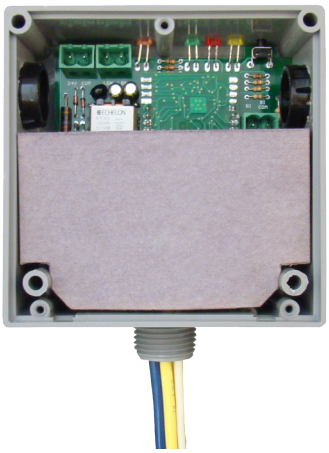

Made in USA
Meets "Buy American" of ARRA 2009

Specifications

 # Relays & Contact Type: One (1) SPDT Continuous Duty Coil
Expected Relay Life: 10 million cycles minimum mechanical
Operating Temperature: -30 to 140° F
Humidity Range: 5 to 95% (noncondensing)
Operate Time: 18ms
Green LED: Network Status
Red LED: Relay Status
Yellow LED: Service Status
Pink LED: Binary Input Status
Dimensions: 4.00˝ x 4.00˝ x 1.80˝ with .50˝ NPT Nipple
Wires: 16˝, 600V Rated
Approvals: FCC, LonMark®, CE, RoHS
UL Listed, UL916, C-UL
Housing Rating: UL Accepted for Use in Plenum, NEMA 1
Gold Flash: No
Override Switch: No

Channel: TP/FT-10
Transceiver Type: FT5000 Smart Transceiver
Transceiver Compatibility: FT3120 / FT3150, FTT-10 / FTT-10A, and LPT-10 / LPT-11 Tranceivers
Functional Blocks: 0000 Node Object
0004 Closed Loop Actuator Object
0001 Open Loop Sensor Object
Downloadable Files: PDF, XIF, APB, VSS and NXE available on website.

Contact Ratings:
20 Amp Resistive @ 277 Vac
20 Amp Ballast @ 120/277 Vac (N/O)
20 Amp Ballast @ 277 Vac (N/C)
16 Amp Electronic Ballast @ 277 Vac (N/O)
10 Amp Tungsten @ 120 Vac (N/O)
1110 VA Pilot Duty @ 277 Vac
770 VA Pilot Duty @ 120 Vac
2 HP @ 277 Vac
1 HP @ 120 Vac

Power Input Ratings:
111 mA @ 24 Vac
96 mA @ 120 Vac (RIBTW2401B-LN)
105 mA @ 208-277 Vac (RIBTW2402B-LN)
81 mA @ 24 Vdc

Power Input:
24 Vac/dc ; 120 Vac ; 50-60 Hz (RIBTW2401B-LN)
24 Vac/dc ; 208-277 Vac ; 50-60 Hz (RIBTW2402B-LN)

Notes:
- Order with P1 option by adding "-P1" to end of model number. The P1 option is pre-programmed to allow dry contact binary input to command the relay. Contact closure on the BI will activate relay.

Description	SNVT Name	SNVT Type
Command to open/close relay	nvi Value	SNVT_switch
Command status of relay	nvo Value Fb	SNVT_switch
Default state of relay on/off	nci Default	SNVT_switch
Communication timer	nci Max Receive T	SNVT_elapsed_tm
Status of Binary Input	nvo Value	SNVT_switch
Invert status of Binary Input	nci Invert	SNVT_lev_disc
Max time between updates	nci Max Send T	SNVT_elapsed_tm
Min time between updates	nci Min Send T	SNVT_elapsed_tm

The relay will go to the default state when the communication timer times out. Setting the timer value to zero will cause the communication to never time out.

It is recommended to put a value in nci Max Send T to ensure the RIB re-synchronizes itself on the network after power loss. It is the responsibility of the user to ensure this value does not cause conflicts in network traffic. (No value = No "heartbeat" updates / no re-sychronization; Low Value = Many updates but may cause many traffic collisions; High value = Few updates but many less collisions.)

Node Object

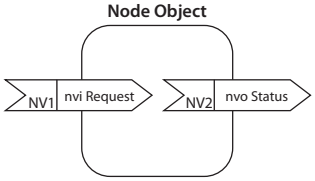

Closed Loop Actuator
(Binary Output)

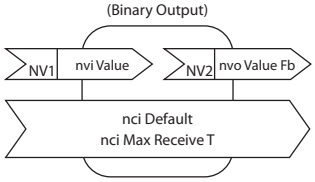
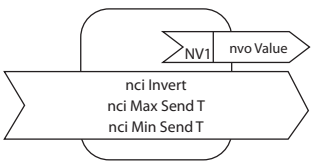
Open Loop Sensor Object
(Binary Input)