PRESSURE TRANSDUCER
TDWLB SERIES

DESCRIPTION

The **Transducers Direct TDWLB Series** is the first Bluetooth® certified wireless pressure transducer with long battery life and patent pending design making the **Transducers Direct CirrusSense™ TDWLB** a perfect fit for many applications for industrial and home automation.

Download the free app, install the transducer and wirelessly connect - no confusing wiring to figure out. From HVAC in marine, campers, motor homes, residential and commercial applications to water, hydraulic, irrigation, pools, medical and sprinkler systems or anywhere you need to monitor pressure without the need of wires.

FEATURES

- ***Connects to smart phones and tablets with BLD (Bluetooth® Low Energy)***
- ***Certified Bluetooth® Wireless technology***
- ***Pressure range from Vacuum to 10,000 psi***
- ***Long battery life (proprietary technology)***
- ***1% Standard accuracy with optional 0.25% Ultra high accuracy***
- ***Alarm set points***

NEW!

TDWLB Series

TDWLB-WR-001

TDWLB-FTK2

SPECIFICATIONS - TDWLB TRANSMITTER

Pressure Accuracy	0.25% or 0.2 psi, whichever is greater, 1% BFSL
Temperature Accuracy	±1°C
Overpressure	2x pressure range
Burst Pressure	5x pressure range
Wetted Materials	17-4PH stainless steel (for other materials consult factory)
Compensated Temperature Range	14 to 185°F (10° to 85°C)
Operating Temperature	40 to 185°F (-40 to 85°C)
Process Connection	1/4" NPT Male, 7/16-20 UNF Male, G1/4 Male, 7/16-20 UNF Female w 45° flare & valve depressor
Electrical Data	
Power Supply	Replacement battery, battery life: 12-18 months, typcial. Battery life is affected by high and low temperatures. Please contact factory for additional information. If battery pack is removed, you must wait 90 seconds to reinstall or unit may lock up.
Compatible Devices	
Software	Android - devices support Bluetooth Smart (Ver 4.0 or later) Android v 4.3 or later, iOS 7.1 or greater iPad Gen 3 and Gen 4 iPad Mini Gen 1 and Gen 2 iPad Air iPhone 5, %c, 5S
Weight	??????
Approvals	FCC ID: 2ACGE-TDWLB, Rating IP-65
Warranty	??????

SPECIFICATIONS - TDWLB-WR-001 ROUTER

Power Supply	8-28 VDC
Current	150ma @ 24 VDC
Operating Temperature	-40° to 185°F (-40° to 85°C)
Storage Temperature	-40° to 185°F (-40° to 85°C)
Electrical Connection	4 pin M12, P1 = Supply V +/Brown, Pin 3 = Ground/Blue
Ingress Rating	IP67 when using T-Directv M12 Cable and Ethernet cable with boot
Communication Protocol	Ethernet - Cat5, Cat5e, Cat6
Communication Protocol	Wi-Fi- 802.11n, 802.11g, 802.11b/2.4 GHz
Security Protocol	WEP, WPA2, WPA2-PSK

NEW!

PRESSURE TRANSDUCER

TDWLB SERIES

DIMENSIONS - TDWLB TRANSMITTER

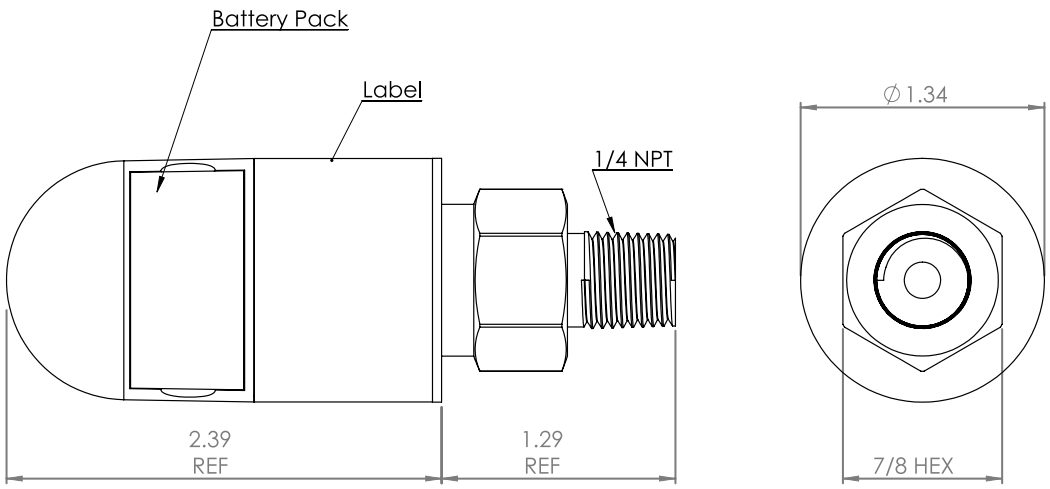

DIMESIONS - TDWLB-WR-001

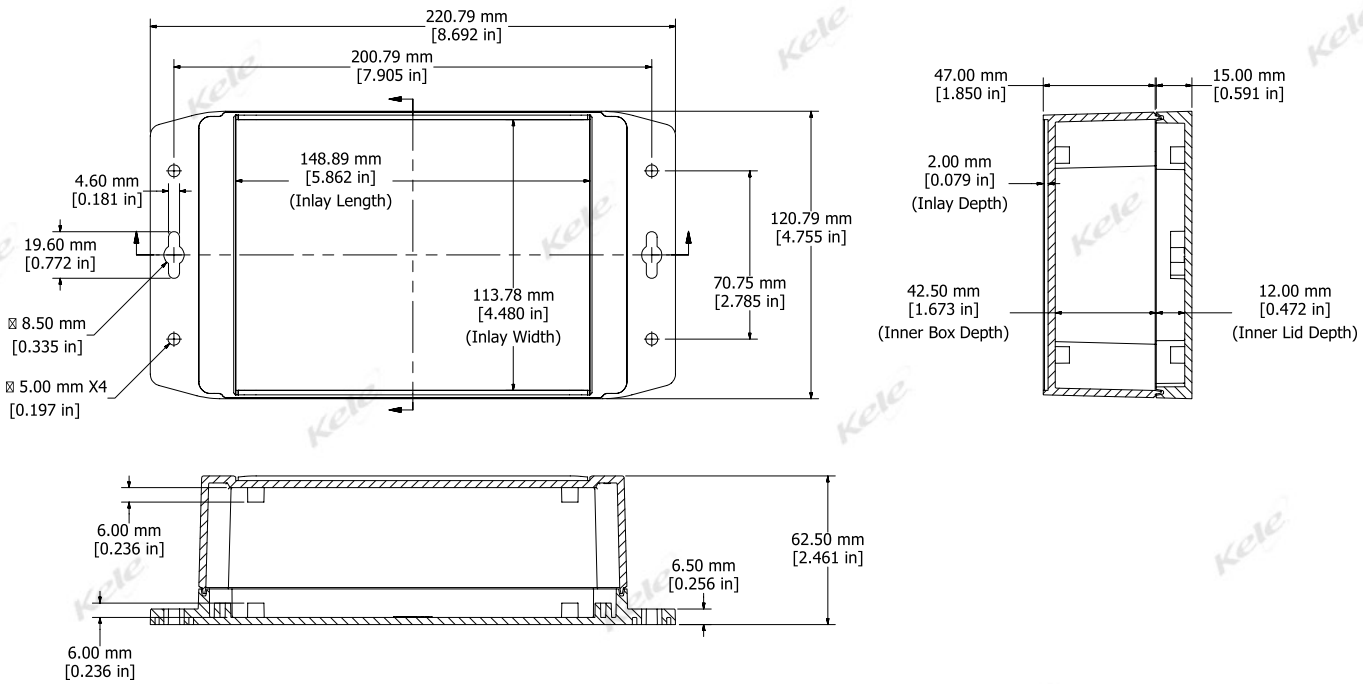

NEW!

ORDERING INFORMATION

MODEL	DESCRIPTION
TDWLB	Pressure Transmitter
	ACCURACY
	100 1.0% accuracy
	200 0.25% accuracy
	PRESSURE RANGE
	0050 50 PSI
	0100 100 PSI
	0250 250 PSI
	0500 500 PSI
	0650 650 PSI
	1000 1000 PSI
	3000 3000 PSI
	5000 5000 PSI
	PRESSURE CONNECTION
	03 1/4" NPT Male
	BATTERY PACK
	Blank Standard battery pack
	T-24 24" Cable with external temp sensor

TDWLB **100** **0050** **03** **T-24**

Example: **TDWLB-100-0050-03-t-24** Pressure transmitter 1.0% accuracy, 50 PSI, 1/4" NPT male, 24" cable with external temp sensor.

ACCESSORIES

TDWLB-WR1	TDWLB router for transducers direct wireless trans
TDWLB-BAT1	Replacement battery pack
TDWLB-BAT-T24	Replacement battery with temperature probe
TDM124F69CR01M	M12 pwer cable assembly 3ft
TDM124F69CR03M	M12 pwer cable assembly 10ft
TDM124F69CR06M	M12 pwer cable assembly 20ft
TDM124F69CR012M	M12 pwer cable assembly 39ft
TDM124F69CR015M	M12 pwer cable assembly 49ft
TDM124F69CR21M	M12 pwer cable assembly 69ft
TDPSUP24800SCTE	Power supply, 115-240VAC IN, 24VDC Output
TDWLB-FTK2	Field technician's kit for wireless pressure trans