PELTEC CURRENT SENSORS

300 SERIES

NEW!

PELTEC Timers
A division of Pelco Component Technologies

DESCRIPTION

The Peltec Timers **300 Series** current sensor is designed for single-phase overcurrent monitoring. The setpoint is determined by a potentiometer, 1 to 20 Amps. The monitored current must not exceed 100 Amps. No shunt resistor is required.

PELTEC 332

FEATURES

- ***Current Toroid located in control, with easy access for connection***
- ***DIN rail mounting***
- ***Universal input 24-240 VAC and 24 VDC***

RoHS

SPECIFICATIONS

Supply Voltage	24-240 VAC, 24 VDC
Frequency	50/60 HZ
Power Consumption (max)	1.5 VA
Current Range	1-20 Amps
Setting Accuracy	5%
Relay Output Form	SPDT
Rated Current	8 Amps
Operating Temperature	-4° to 131°F (-20° to 55°C)
Storage Temperature	-22° to 158°F (-30° to 70°C)
Approvals	EN 60255-6, EN61010-1, UL #E352333, CE, RoHS

WIRING

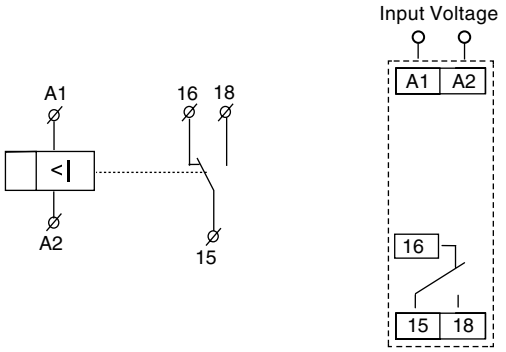

ORDERING INFORMATION

MODEL	DESCRIPTION
332	1-20A current sensor, 24-240VAC/24VDC input, 8A relay

NEW!