3-1/2 DIGIT LCD PANEL DISPLAY

VPI SERIES

DESCRIPTION

The **VPI Series** is a voltage-input, 24 VDC-powered, 3-1/2 digit display. Along with the standard black digits, colors of amber, green, and red, powered by 24 VDC, are also available. The **VPI Series** uses a voltage signal of 0-5 or 0-10 VDC that can be scaled to a span of 2000 digits within a range of -1999 to 1999. This display also features jumper-selectable, built-in engineering units of °F, °C, PSI, %, or no units. The **VPI-4** offers large, easy-to-read 1" (2.54 cm) digits.

VPI-1C-WMB

VPI-4

VPI-1C-G (typical panel mount)

VPI-1C-R-E

VPI-1C-R-E-DBL

FEATURES

- ***0-5 or 0-10 VDC signal input***
- ***3-1/2 digit, easy-to-read LCD display***
- ***Voltage-input signal***
- ***Available in black, amber, green, and red digits***
- ***Snap-in panel mounting***
- ***NEMA 4X enclosure available***
- ***Precalibrated before shipping***
- ***Positive-to-negative indication***
- ***Jumper-selectable engineering unit display of °F, °C, PSI, %***

APPLICATION

- ***Temperature***
- ***Humidity***
- ***Pressure***
- ***Differential or static pressure***
- ***Kilowatt demand***
- ***Gallons per minute***
- ***Voltage***
- ***Many other voltage signal applications***

SPECIFICATIONS

Power	
Colored digits	24 VDC @ 35 mA
Black digits	24 VDC @ 10 mA
Input signal	0-5 VDC or 0-10 VDC
Impedance	400 kΩ
Accuracy	0.1% of scale plus one digit
Digit size	
VPI-1C	0.5" (1.27 cm)
VPI-4	1.0" (2.54 cm)
Decimal point	Three positions or none
Zero range	-1999 to 1999
Digit span	2000 digits

Operating temp	32° to 122°F (0° to 50°C)
Humidity	95% noncondensing
Cutout required	
VPI-1C	1.00"H x 2.40"W (2.54 x 6.10 cm)
VPI-4	1.77"H x 3.62"W (4.5 x 9.2 cm)
Panel clearance	1.0" (5.08 cm)
Enclosure option (VPI-1C only)	
E (NEMA 4X)	6.0"H x 6.0"W x 3"D (15.2 x 15.2 x 7.6 cm)
WMB	2.12"H x 3.12"W x 1.75"D (5.4 x 7.94 x 4.45 cm)
Weight	2.3 oz (56.7g)

WIRING

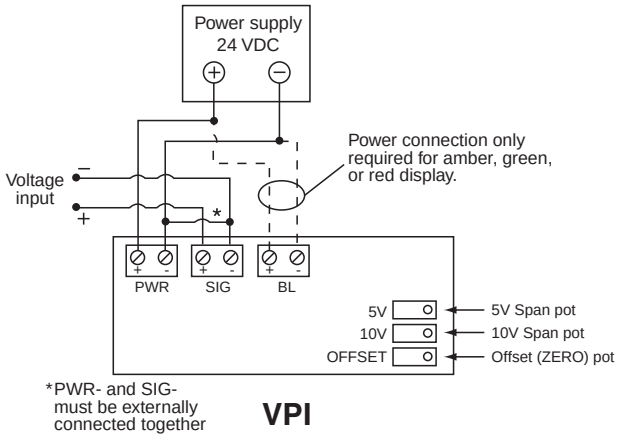

VPI

DIMENSIONS / MOUNTING INFORMATION

WMB Option
(display with enclosure)

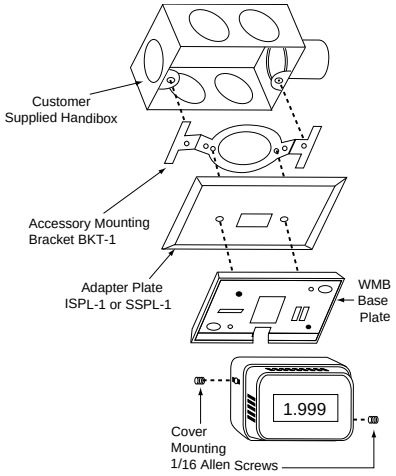

VPI-1C-WMB

Standard Panel Mounting

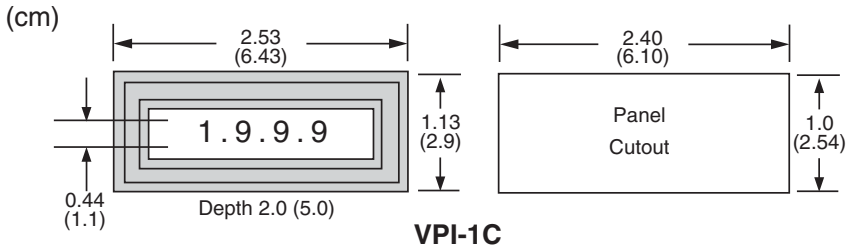

VPI-1C

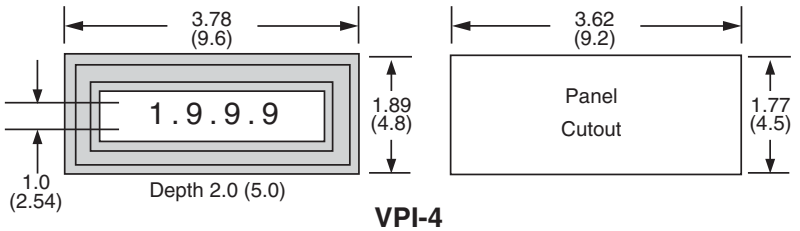

VPI-4

RECALIBRATION INFORMATION

Decimal Point Selection

1. Locate jumpers J4 through J6 in the middle of the circuit board unit.
2. Jumper the appropriate decimal location as follows:

   J4 - 000.0
   J5 - 00.00
   J6 - 0.000
   None - 0000

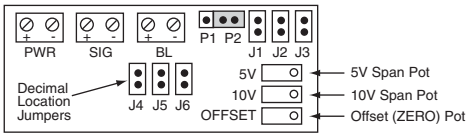

Circuit Board Unit

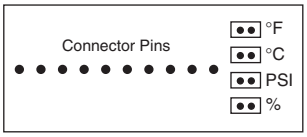

Engineering unit jumper displays selected unit to the right of display reading.

Back of Display

Range Calibration

Note: The **VPI** is designed to span 2000 digits. For example, a zero point of -1500 will limit the max display to 500.

1. Verify that the **VPI** board is jumpered for 24 VDC (P2) and the correct input signal required, 5V (J1) or 10V (J2).
2. Apply zero volts and adjust the OFFSET POT for the low numeric display value.
3. Locate the correct span pot for the input signal selected in step 1.
4. Apply the maximum volts and adjust the appropriate span pot for the maximum display value.
5. Repeat steps 2 and 4 until both minimum and maximum display values are obtained without adjustment (three to four passes typical).

Display Engineering Unit Selection

1. Locate the engineering unit selection jumpers on the back of the display.
2. Select the appropriate units to be displayed by jumpering the desired pins. Remove the jumper if no engineering unit display is desired.

ORDERING INFORMATION

* Displays are custom calibrated at no charge before shipping.

Specify signal input (0-5V or 0-10V) scale, range, engineering units, and decimal location when ordering.

MODEL	DESCRIPTION
VPI-4	3-1/2 digit panel display*, 1" (2.54 cm) digits
VPI-1C	3-1/2 digit panel display*, 0.5" (1.27 cm) digits
VPI-3C	4-1/2 digit panel display*, 0.5" (1.27 cm) digits

–	3-1/2 digit display with black digits
A	3-1/2 digit display with amber digits
G	3-1/2 digit display with green digits
R	3-1/2 digit display with red digits

–	No enclosure
E	LCD panel display with NEMA 4X enclosure (VPI-1C and VPI-3C only)
WMB	LCD panel display with small enclosure (VPI-1C and VPI-3C only)
E-DBL	Two LCD panel displays in one NEMA 4X enclosure (VPI-1C and VPI-3C only)

VPI-1C – **A** – **E-DBL**

Example: **VPI-1C-A-E-DBL** Two amber 3-1/2 digit displays mounted in a single enclosure